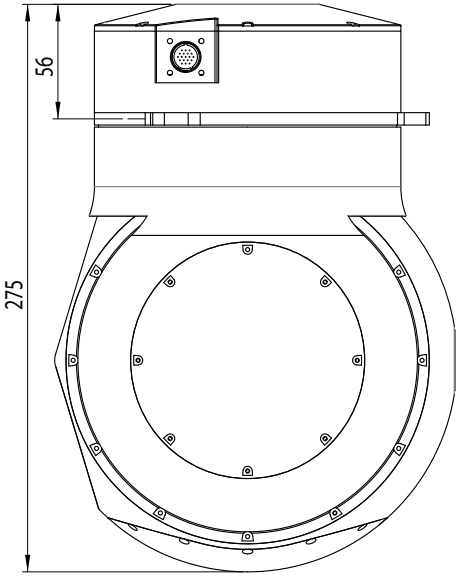

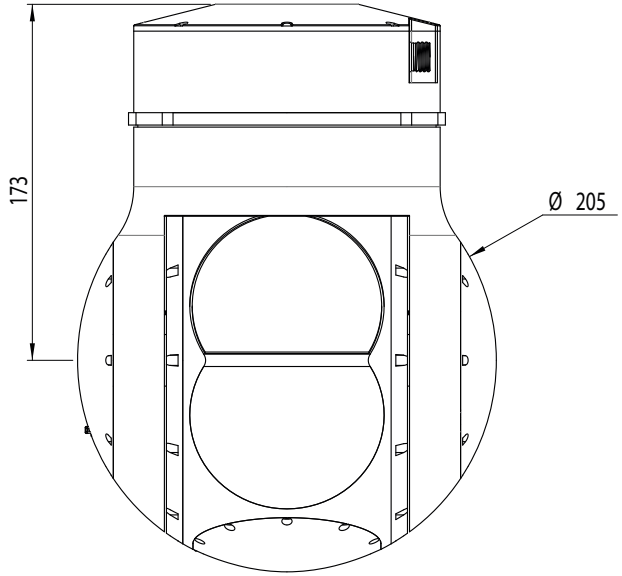

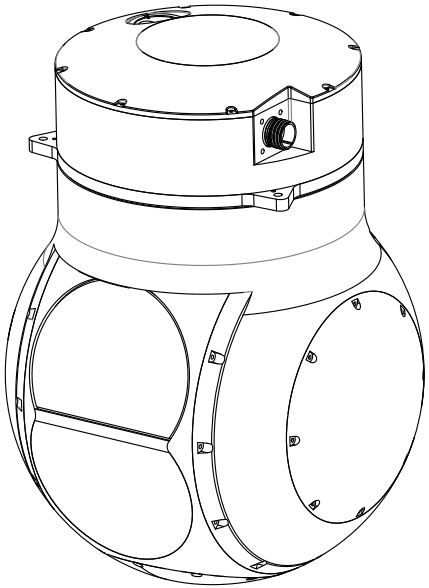

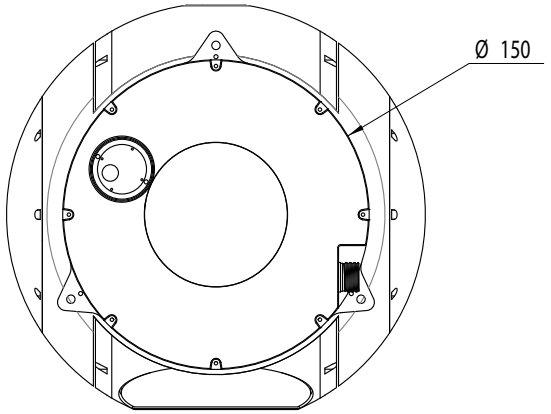

The information contained in this document is furnished in confidence. Possession hereof in no way constitutes any rights to use, reproduce or disclose the document, in whole or in part, except as authorised by DST Control AB. Copyright DST Control AB as per date of issue hereof. All rights reserved.

DST CONTROL
ÅKERBOGATAN 10, SE-582 54 LINKÖPING
SWEDEN, PHN / FAX +46 13 211080 / 211081
www.dst.se, info@dst.se

UNLESS OTHERWISE SPECIFIED:
DIMENSIONS ARE IN MILLIMETERS
SURFACE FINISH & TOLERANCES:
ISO 2768-1(f)
ISO 2768-2(f)
DEBURR AND BREAK SHARP EDGES!
DO NOT SCALE DRAWING!

PROJECT CODE / PART DESCRIPTION: GUA1707V01
Gimbal Unit Assembly

MODEL STATUS: New	MATERIAL			DWG. NO.: GUA1707V01	MODEL REV.
	CLIENT: DST			CONFIG.: Mock Up	
DWG. STATUS: New	DRAWN: AL 2017-04-28	APPV'D	WEIGHT: 2001.19 / SHEET NAME: Sheet1	PROJ. METHOD E / SIZE A3 / SHEET 1 OF 1 / SCALE 1:2.5	PART NO.: GUA1707V01 / DWG. REV.: -